GARMIN®

GT360UHD Transducer

Installation Instructions

Important Safety Information

⚠ WARNING

See the *Important Safety and Product Information* guide in the chartplotter or fishfinder product box for product warnings and other important information.

You are responsible for the safe and prudent operation of your vessel. Sonar is a tool that enhances your awareness of the water beneath your boat. It does not relieve you of the responsibility of observing the water around your boat as you navigate.

⚠ CAUTION

Failure to install and maintain this equipment in accordance with these instructions could result in damage or injury.

To obtain the best performance and to avoid damage to your boat, you must install the Garmin® device according to these instructions.

Read all installation instructions before proceeding with the installation. If you experience difficulty during the installation, go to support.garmin.com for more information.

Software Update

You must update the Garmin® chartplotter software when you install this device. For instructions on updating the software, see your chartplotter owner's manual at support.garmin.com.

Installing the GT360UHD Transducer on the Spy Pole Mount

The GT360UHD transducer is installed at the factory in a mounting bracket designed to attach to the bottom shaft of the Spy Pole mount.

For more information about routing the GT360UHD transducer cable through the Spy Pole shaft, refer to the Spy Pole mount installation instructions at garmin.com/manuals/spypole

1. If you have any attachments already connected to the bottom shaft of the Spy Pole mount, remove them.
2. Using a #2 Phillips screwdriver, remove the top half of the Spy Pole shaft cap.
3. Feed the GT360UHD transducer cable up the Spy Pole mount and out the top.
4. Feed the GT360UHD transducer cable into the cable sleeve and out the other hole in the shaft cap.
5. Slide the GT360UHD transducer assembly onto the bottom shaft.
6. Insert the included 20 mm bolt through the holes in the GT360UHD assembly and the bottom shaft, and hand tighten the nut onto the bolt on the other side.

7 Use a 5 mm hex wrench or bit to fully tighten the bolt.

Attaching the LiveScope™ Transducer Side Shaft Mount

The GT360UHD kit includes a side shaft mount for a LiveScope transducer. With this mount, you can mount any LiveScope transducer to the Spy Pole mount.

1 Locate the front half of the side shaft mount, the four black screws, and the 5 mm hex wrench.
2 Place each half of the mount around the device shaft, and hand-tighten each screw.
3 After tightening the screws by hand, adjust the height of the mount and fully tighten the screws with the hex wrench.

Connecting a LiveScope™ Transducer to the Side Shaft Mount

Before you connect a LiveScope transducer to the side shaft mount, you should route the transducer cables through the Spy Pole shaft. See the installation instructions for the Spy Pole mount at garmin.com/manuals/spypole for more information.

The GT360UHD kit includes hardware that allows you to easily attach a LiveScope transducer to the side shaft mount. To install a LiveScopeLVS32, see the next section.

⚠ CAUTION

Do not install more than two transducers on the Spy Pole mount. Exceeding this limit may cause premature wear or damage and will void the product warranty.

1 Select the appropriate adapter disc and knob for your LiveScope transducer model.

   Each disc is labeled with the LiveScope transducer model number.

   If you are using the LiveScope transducer side shaft mount on a Spy Pole shaft that is installed on a trolling motor, you cannot mount a LiveScope LVS62 transducer using this mount. In this situation, you should mount the LiveScope LVS62 transducer to the bottom of the Spy Pole shaft.
2 Remove the plastic coating on the back of the adapter disc, and attach it to the end flange on the side shaft mount.
3 Feed the adapter knob through the transducer.
4 Hand-tighten the adapter knob into the side shaft mount until the LiveScope transducer is tight against the adapter disc.

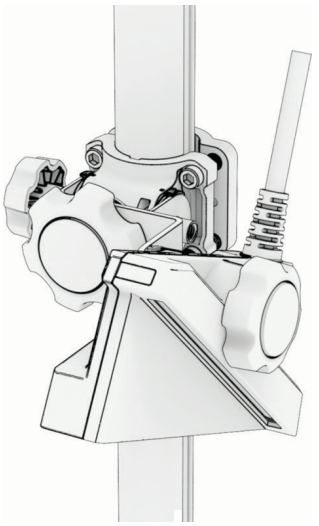

To change the angle of the transducer, loosen the knob, adjust the angle, and then tighten the knob again to secure it.

Connecting a LiveScope™ LVS32 Transducer to the Side Shaft Mount

Before you connect a LiveScope transducer to the side shaft mount, you should route the transducer cables through the Spy Pole shaft. See the installation instructions for your Spy Pole mount at garmin.com/manuals/spypole for more information.

The GT360UHD transducer kit includes hardware that allows you to easily attach a LiveScope LVS32 transducer to the side shaft mount.

1. Using a flat pry tool, peel off the lock nut and housing from the end of the mounting bracket on the side shaft mount.

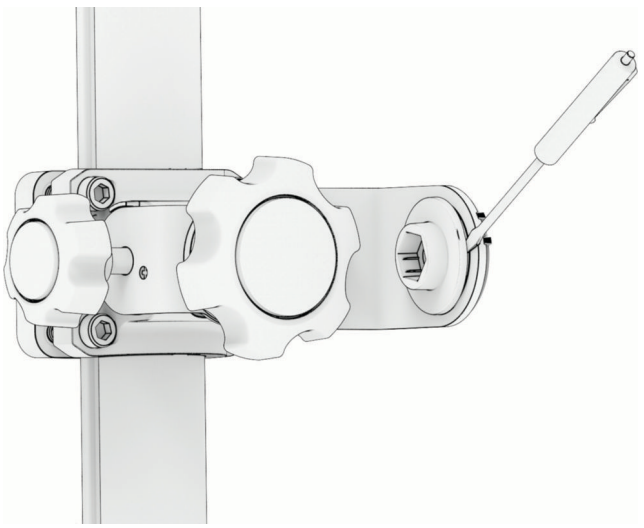

2. Select the appropriate adapter disc and screw for your LiveScope transducer model.

   Each disc is labeled with the LiveScope transducer model number.
3. Remove the plastic coating on the back of the adapter disc, and attach it to the end flange on the side shaft mount.
4. Slide the washer onto the screw.
5. Feed the screw through the shaft mount and into the LiveScope transducer.
6. Adjust the angle of the transducer, and tighten the screw using the included 5 mm hex wrench.

Attaching the Dogbone Stabilizer

The dogbone stabilizer provides another connection point between the trolling motor shaft and Spy Pole mount to reinforce the stability of the Spy Pole mount when multiple devices are attached.

1 Locate the front and back half of the trolling motor locking collar, as well as the hex screws to connect the halves.

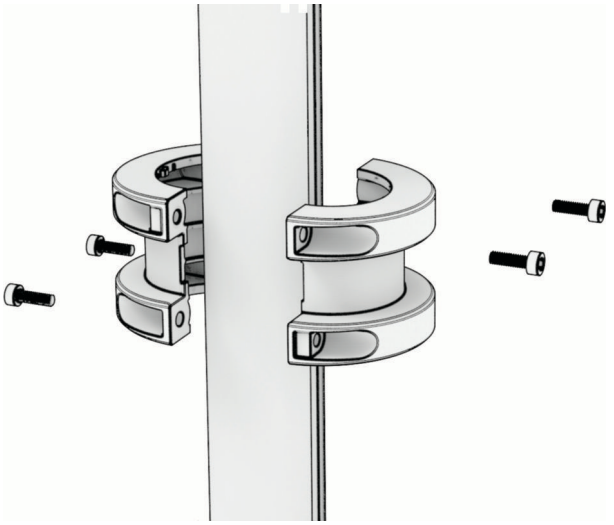

The collar is labeled Trolling Motor.

2 Hold the halves together around the trolling motor shaft.
3 Using the included bolts, secure the two halves together around the trolling motor shaft, and tighten them using the included 3 mm hex wrench.
4 Locate the front and back half of the Spy Pole locking collar.

The collar is labeled Spy Pole.

5 Hold the halves together around the Spy Pole shaft at the same height as the other collar.
6 Using the included bolts, secure the halves together around the Spy Pole shaft, and tighten them using the included 3 mm hex wrench.
7 Unlatch each end of the dogbone stabilizer.
8 Place the dogbone stabilizer around both collars, and latch the clasps.

Transducer Settings and Operation

For transducer settings and operation information, see your chartplotter owner's manual.

Specifications

Dimensions (L × W × H)	58.1 mm × 215.9 mm × 97.0 mm (2.29 in. × 8.5 in. × 3.82 in.)
Operating temperature range	From 0° to 50°C (from 32° to 122°F)
Storage temperature range	From -40° to 70°C (from -40° to 158°F)
Transmit power (RMS)	SideVü 1 and 2: 500 W Traditional: 350 W
Frequencies	SideVü 1 - High-Definition SideVü: 455/800 kHz, CHIRP range: 400–500 kHz, 740–900 kHz SideVü 2 - Ultra-High-Definition SideVü: 1.0 MHz (1,000 kHz), CHIRP range: 940–1100 kHz Traditional: ~300 kHz, CHIRP range: ~290-310 kHz
Maximum depth/ range[1]	SideVü 1: 152.4 m (500 ft.) to each side High-Definition SideVü (455 kHz), 304.8 m (1000 ft.) total, at a max. depth of 30.5 m (100 ft.) SideVü 2: 61 m (200 ft.) to each side Ultra-High-Definition SideVü (1 MHz), 122 m (400 ft.) total, at a max. depth of 12.2 m (40 ft.) Traditional: 45.72 m (150 ft.)

[1] Dependent upon water salinity, bottom type, and other water conditions.

物質宣言

部件名称	有毒有害物质或元素									
	铅	汞	镉	六价铬	多溴联苯	多溴二苯醚	邻苯二甲酸二(2-乙基己)酯	邻苯二甲酸丁苄酯	邻苯二甲酸二丁酯	邻苯二甲酸二异丁酯
印刷电路板组件	X	O	O	O	O	O	O	O	O	O
金属零件	X	O	O	O	O	O	O	O	O	O
电缆 电缆组件 连接器	X	O	O	O	O	O	O	O	O	O
塑料和橡胶零件	O	O	O	O	O	O	O	O	O	O

本表格依据 SJ/T11364 的规定编制。

O: 代表此种部件的所有均质材料中所含的该种有害物质均低于 (GB/T26572) 规定的限量

X: 代表此种部件所用的均质材料中, 至少有一类材料其所含的有害物质高于 (GB/T26572) 规定的限量

* 该产品说明书应提供在环保使用期限和特殊标记的部分详细讲解产品的担保使用条件。

10 产品

联系信息

制造厂商 : 台湾国际航电股份有限公司
销售厂商 : 上海佳明航电企业管理有限公司
联络地址 : 上海市徐汇区桂平路 391 号 (新漕河泾国际商务中心 A 座 37 层)
电 话 : 021-60737675
客服专线 : 400-819-1899